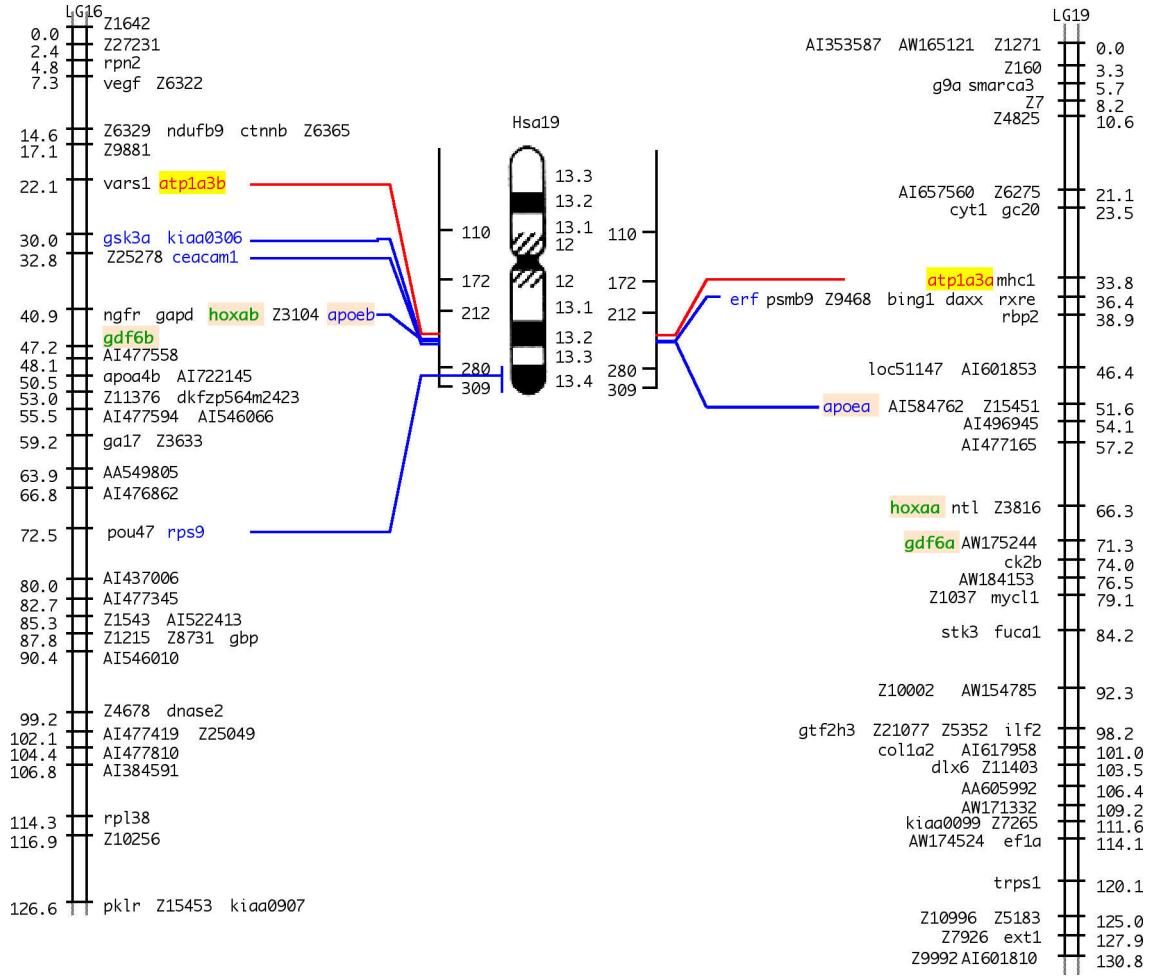
LG16
0.0 Z1642
2.4 Z27231
4.8 rpn2
7.3 vegf Z6322
14.6 Z6329 ndufb9 ctnnb Z6365
17.1 Z9881
22.1 vars1 atp1a3b
30.0 gsk3a kiaa0306
32.8 Z25278 ceacam1
40.9 ngfr gapd hoxab Z3104 apoeb
47.2 gdf6b
48.1 AI477558
50.5 apoa4b AI722145
53.0 Z11376 dkfzp564m2423
55.5 AI477594 AI546066
59.2 ga17 Z3633
63.9 AA549805
66.8 AI476862
72.5 pou47 rps9
80.0 AI437006
82.7 AI477345
85.3 Z1543 AI522413
87.8 Z1215 Z8731 gbp
90.4 AI546010
99.2 Z4678 dnase2
102.1 AI477419 Z25049
104.4 AI477810
106.8 AI384591
114.3 rpl38
116.9 Z10256
126.6 pklr Z15453 kiaa0907
Hsa19
110
172
212
280
309
13.3
13.2
13.1
12
12
13.1
13.2
13.3
13.4
110
172
212
280
309
LG19
AI353587 AW165121 Z1271 0.0
Z160 3.3
g9a smarca3 5.7
Z7 8.2
Z4825 10.6
AI657560 Z6275 21.1
cyt1 gc20 23.5
atp1a3a mhc1 33.8
erf psmb9 Z9468 bing1 daxx rxre 36.4
rbp2 38.9
loc51147 AI601853 46.4
apoea AI584762 Z15451 51.6
AI496945 54.1
AI477165 57.2
hoxaa ntl Z3816 66.3
gdf6a AW175244 71.3
ck2b 74.0
AW184153 76.5
Z1037 mycl1 79.1
stk3 fuca1 84.2
Z10002 AW154785 92.3
gtf2h3 Z21077 Z5352 ilf2 98.2
col1a2 AI617958 101.0
dlx6 Z11403 103.5
AA605992 106.4
AW171332 109.2
kiaa0099 Z7265 111.6
AW174524 ef1a 114.1
trps1 120.1
Z10996 Z5183 125.0
Z7926 ext1 127.9
Z9992 AI601810 130.8